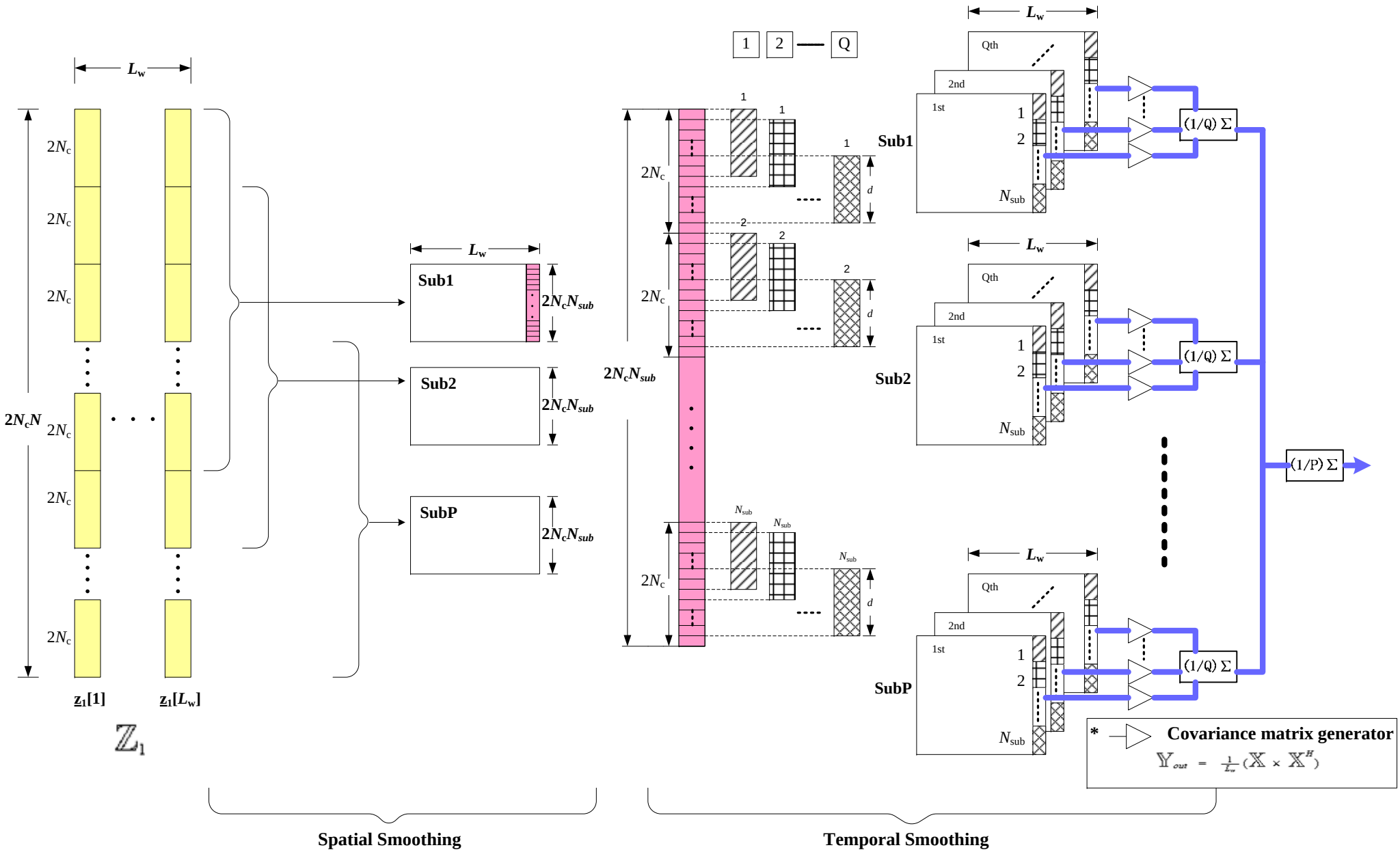
L_w
$2N_c$
$2N_cN$
$z_1[1]$
$z_1[L_w]$
$\mathbb{Z}_1$
Sub1
Sub2
SubP
$2N_cN_{sub}$
1
2
Q
N_{sub}
d
Qth
2nd
1st
(1/Q) Σ
(1/P) Σ
*
Covariance matrix generator
$\mathbb{Y}_{out} = \frac{1}{L_w}(\mathbb{X} \times \mathbb{X}^H)$
Spatial Smoothing
Temporal Smoothing